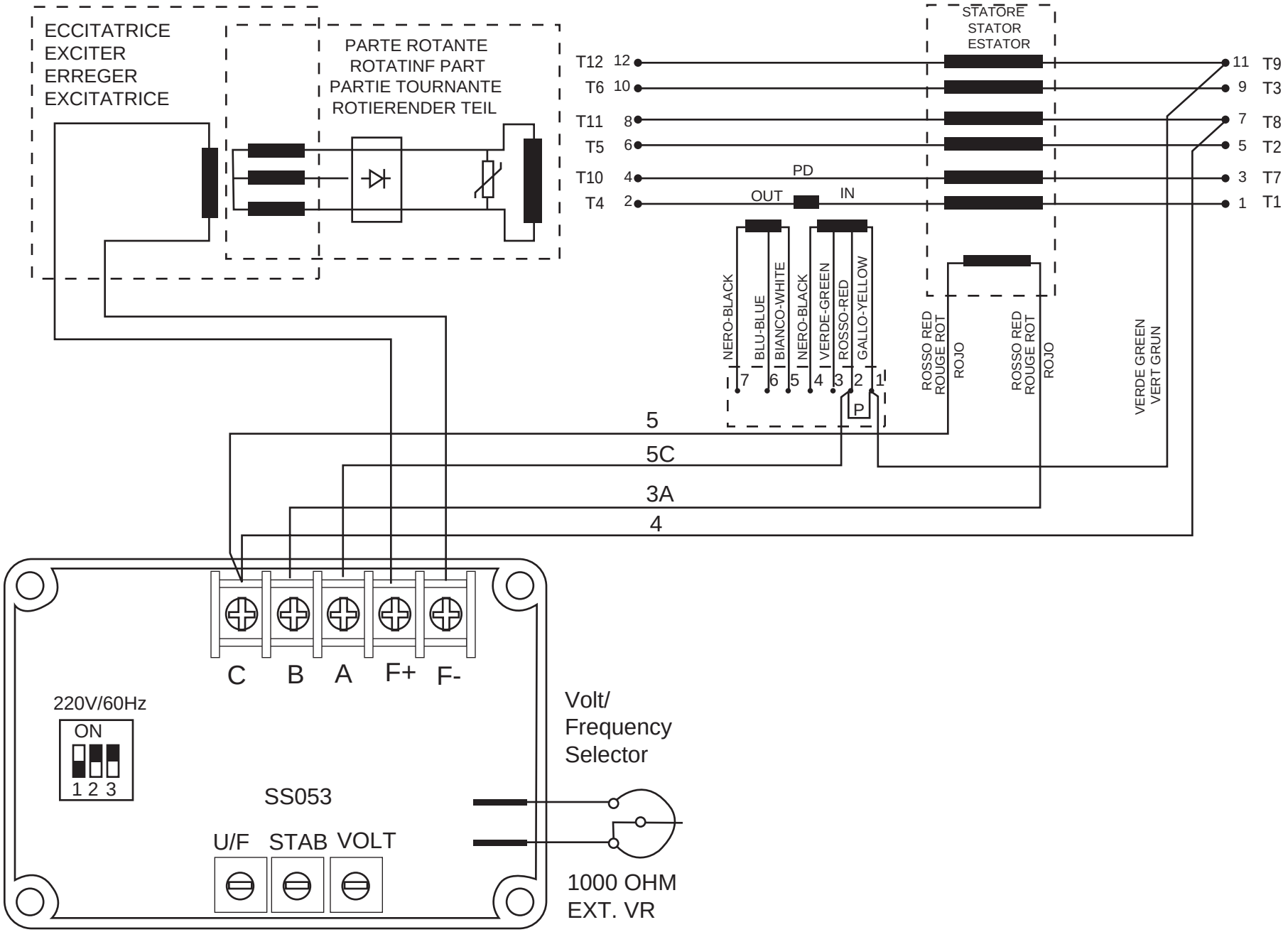
ECCITATRICE
EXCITER
ERREGER
EXCITATRICE
PARTE ROTANTE
ROTATINF PART
PARTIE TOURNANTE
ROTIERENDER TEIL
STATORE
STATOR
ESTATOR
T12 12
T6 10
T11 8
T5 6
T10 4
T4 2
11 T9
9 T3
7 T8
5 T2
3 T7
1 T1
PD
OUT
IN
NERO-BLACK
BLU-BLUE
BIANCO-WHITE
NERO-BLACK
VERDE-GREEN
ROSSO-RED
GALLO-YELLOW
7 6 5 4 3 2 1
P
ROSSO RED
ROUGE ROT
ROJO
ROSSO RED
ROUGE ROT
ROJO
VERDE GREEN
VERT GRUN
5
5C
3A
4
C B A F+ F-
220V/60Hz
ON
1 2 3
SS053
U/F STAB VOLT
Volt/
Frequency
Selector
1000 OHM
EXT. VR